Clamp 956/02 (diam. 5 x 20)

Fuse clamps and fuse holders - Fuse clamps

Buy this product online

www.mfom.fr

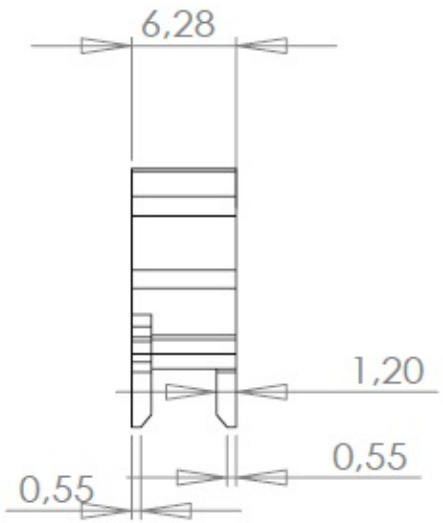

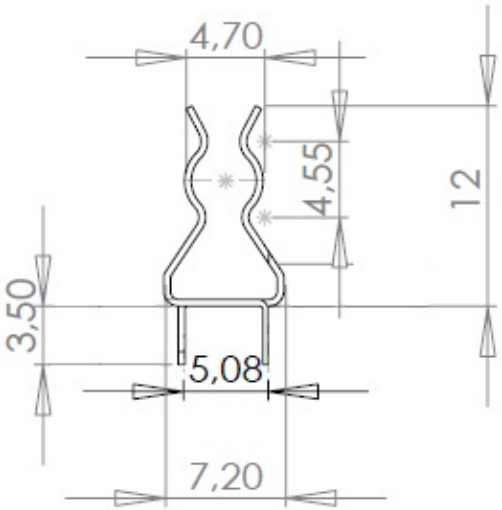

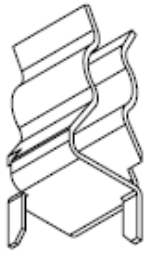

Material

956/02 A = Steel • 956/02 L = Brass