Terminal blocks 22462-3

Turret Terminal Board - Relay strips

Buy this product online

www.mfom.fr

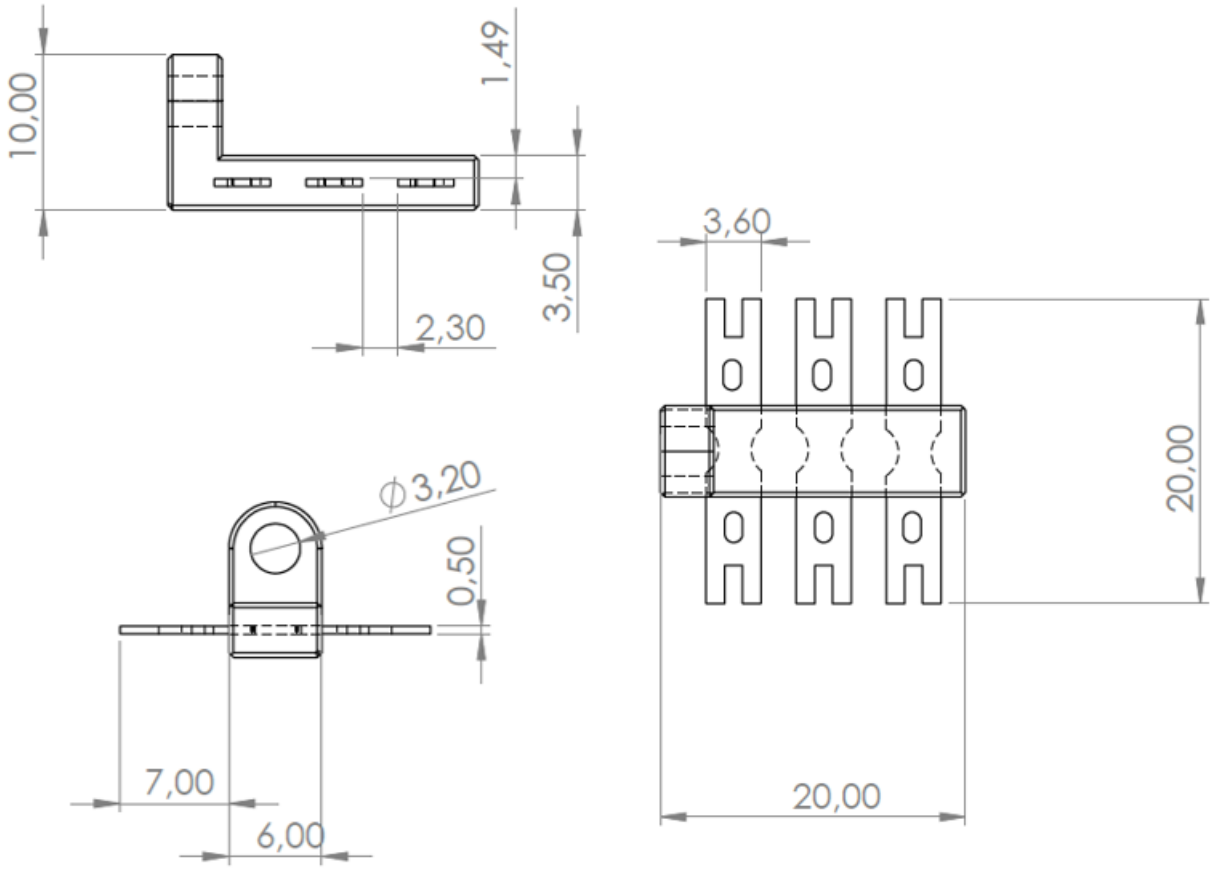

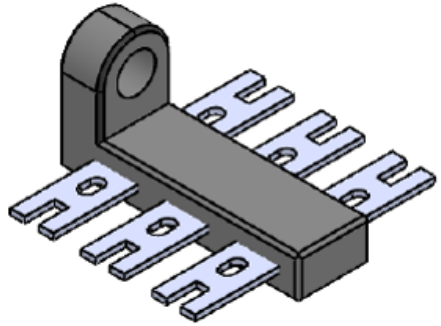

Material

Material Block: PBT • Lug: RoHS brass • For other number of contacts, contact us.

TRELEC MFOM

TRELEC *- 6 Rue Emile Foisy - 28200 Châteaudun - Phone. : 02.37.45.19.25 - Fax : 02.37.45.71.97 - Code OTAN / NATO code F1595*