Tab terminals

MFOM Terminals - Tab terminals

Buy this product online

www.mfom.fr

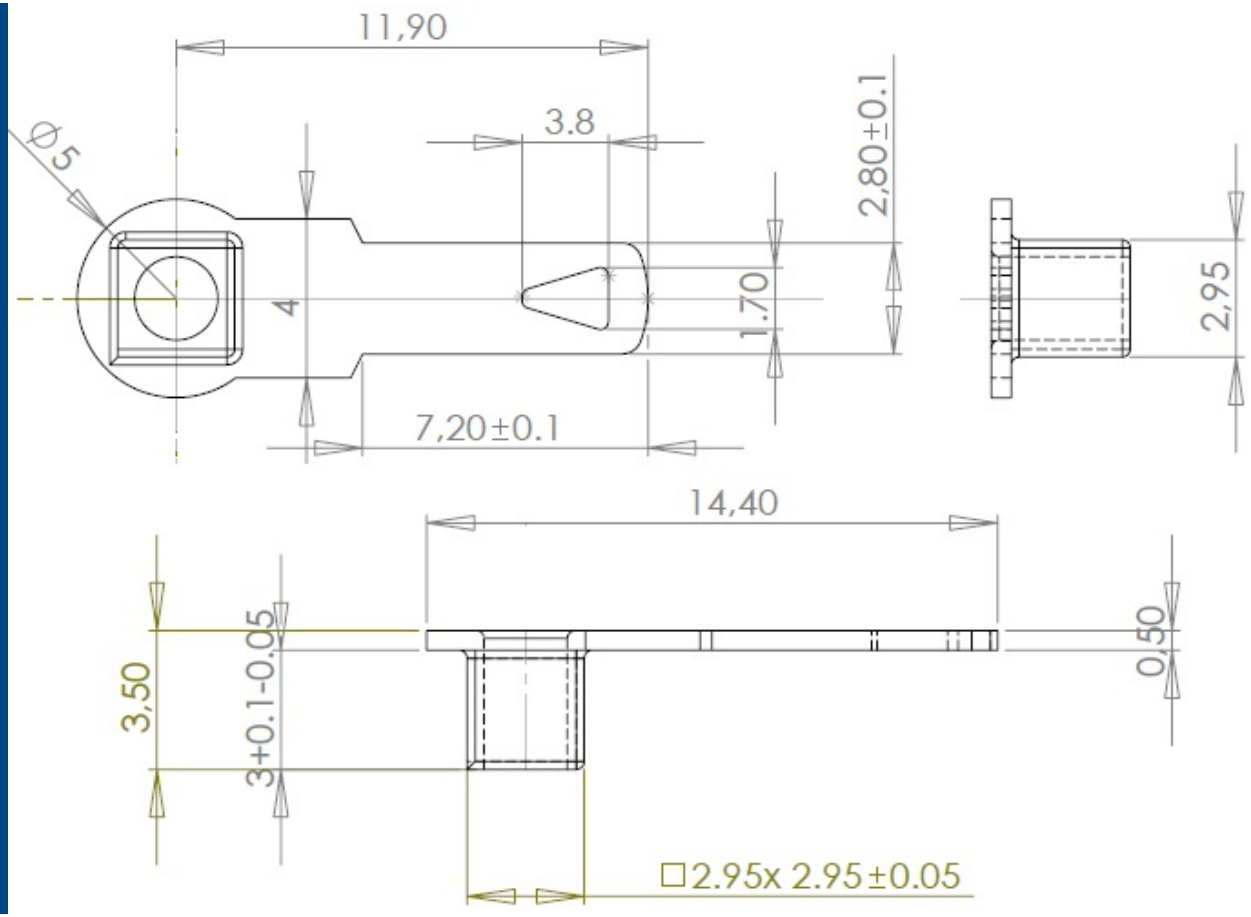

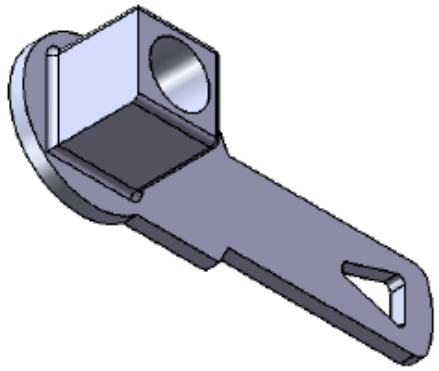

Electrical characteristics

Terminal lugs Y135

Material

RoHS tinned brass

Other characteristics

Other materials and other treatments on request

TRELEC *- 6 Rue Emile Foisy - 28200 Châteaudun - Phone. : 02.37.45.19.25 - Fax : 02.37.45.71.97 - Code OTAN / NATO code F1595*