Clamp 963

Fuse clamps and fuse holders - Fuse clamps

Buy this product online

www.mfom.fr

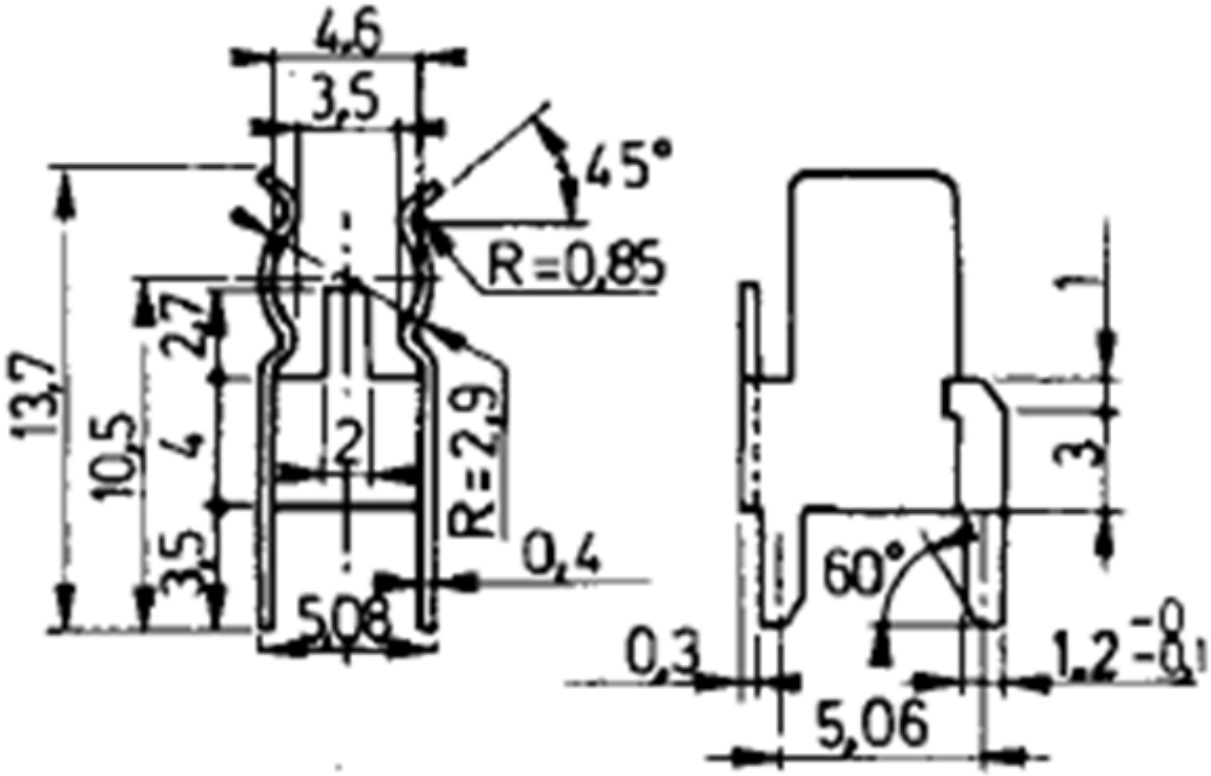

Material

963 A = Steel • 963 L = Brass

TRELEC *- 6 Rue Emile Foisy - 28200 Châteaudun - Phone. : 02.37.45.19.25 - Fax : 02.37.45.71.97 - Code OTAN / NATO code F1595*